TTB BIG BAG LIFTERS

The TTB big bag lifters are designed to lift and transport large bags safely and securely. They are manufactured as a 4 point spreader beam in a fixed frame. The construction incorporates 4 hooks with safety latches that allow fast loading and unloading.

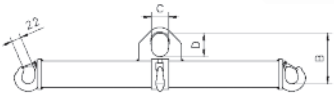

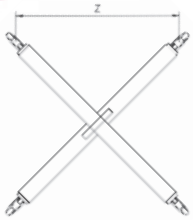

Model	WLL kg	Width (Z) mm	B mm	C mm	D mm	Weight kg
TTB 1/1090	1000	750 - 800	210	60	110	27
TTB 1/1320	1000	900 - 970	210	60	110	33
TTB 2/1090	2000	750 - 800	240	75	135	42
TTB 2/1320	2000	900 - 970	240	75	135	52

FLTH ADJUSTABLE 'DUAL' TINE HOOKS

The FLTH tine hook is designed to convert your forklift truck into a crane. This is done by simply sliding the FLTH over the tines of your forklift truck. The FLTH is fastened to the tines by tightening the two threaded bars underneath each tine. The unit is supplied a standard with a swivel safety hook.

Model	WLL kg	Max. fork size mm	Weight kg
FLTH 1	1000	120 x 60	25
FLTH 2	2000	120 x 60	31
FLTH 3	3000	120 x 60	37

SL SHEARLEGS

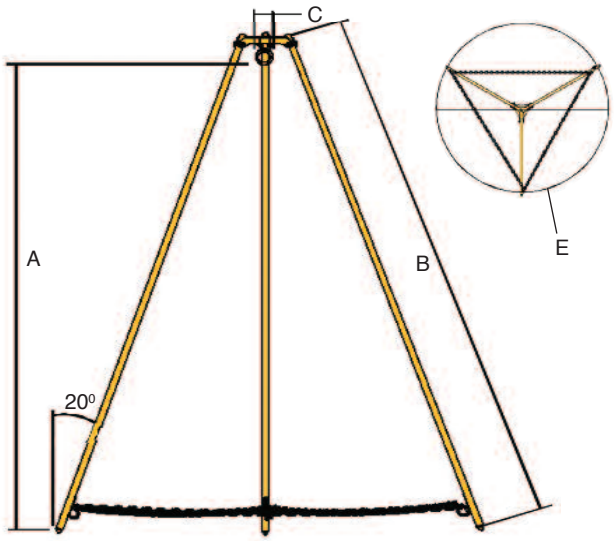

The Camlok Shearlegs have been designed to be simple and easy to erect and operate. Each set of shearlegs are supplied, as standard, fitted with safety chains and a large eyebolt for the suspension of hand operated lifting mechanisms, chain blocks or pulleys.

NB: These shearlegs must <u>not</u> be used for lifting personnel. Height Safety Tripods are available on page 57.

Model	WLL kgs	Height to eye mm	Leg length mm	PCD 'E' mm	Weight kgs
SL0.500/2	500	2000	2254	1800	24
SL1000/2	1000	2000	2276	1816	33
SL1000/3	1000	3000	3340	2544	44
SL1000/4	1000	4000	4411	3270	89
SL2000/3	2000	3000	3366	2554	71
SL2000/4	2000	4000	4430	3282	90
SL3000/3	3000	3000	3409	2730	88
SL3000/4	3000	4000	4473	3458	108

Available with a variety of leg and foot options:

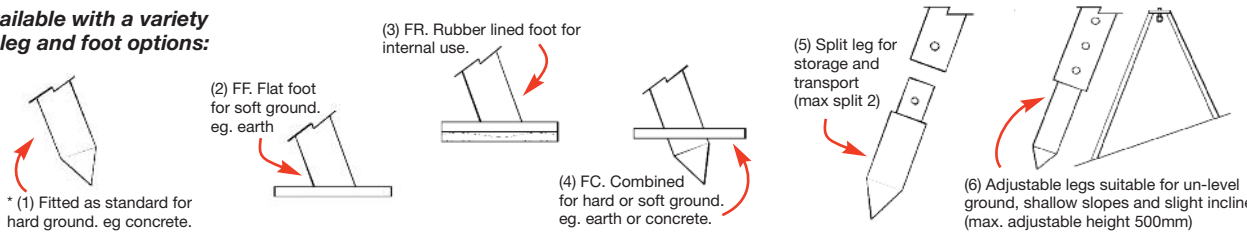

Fitted with standard legs for hard ground. Call the sales team for prices on other foot options.