Python Container Hook

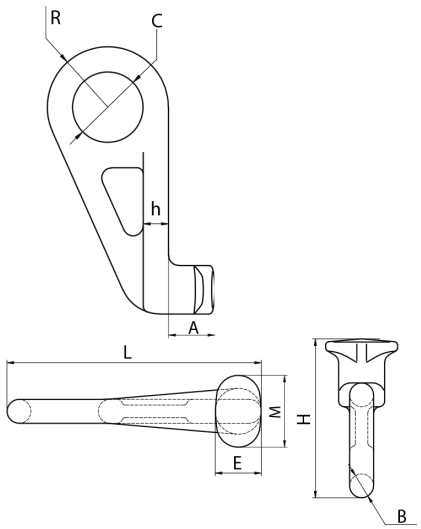

W.L.L	A	B	C	E	R	M	L	H	h	Weight
tonnes	(mm)	(mm)	(mm)	(mm)	(mm)	(mm)	(mm)	(mm)	(mm)	kgs
12.5	46	25	70	48	60	75	265	166	25	4

- **Material G80 Forged super alloy steel quenched and tempered**
- **Standard to EN818-2**
- **Proof tested to 2.5 times working load limit**
- **Fatigue Tested to 1.5 Working load limit for 20,000 cycles**
- **100% Magnaflux crack detection**
- **Ultimate load is 4 times W.L.L**